GECO®

SOLAR POWER SYSTEMS

Manufactured by

risen

2013-V1

SOLAR MODULES

PRODUCT CATALOGUE

Introduction

OVERVIEW

Risen Company Founded in 2002, has evolved from a manufacturer of lamp to a leading professional solar PV manufacturer providing world first class quality in its high performance PV modules, solar cells and solar lighting products.

Risen successfully launched IPO in Shenzhen Stock Exchange Market in 2010, Stock code: 300118.

In 2011, Risen start to operate internationally by opening office in Germany and Hong Kong to deliver best value to customers. At the end of 2012, Risen reached capacity to 800MW, with totally 3200 workers in 4 manufacturing plants in Ninghai, east of China.

Risen has established long term relationship with partners from EU, North American, South Africa and Southeast Asia, more than 30 countries and regions.

Quality Control and Internal Test

Strict Quality Control System is applied to ensure 100% qualified modules delivered; 10 years' module manufacturing experience is a basis of knowing-how to produce the best quality.

Risen is applying a quality control project start from Incoming material until final packaging. Specially, Risen applies two stages(before & after lamination) 100% EL test to filter out modules with micro-crack and other critical defects; Berger simulator and other test equipments are also calibrated by TUV Reinland and other global-known independent institutes to ensure real power of each module. To back up, a complete barcode system is applied to record material, IV curve of each module, and this data is traceable for 25 years. National Class Laboratory in the R & D center is established to develop new module versions and regularly checking the module materials and finished modules for various properties. Under head of Dr. Zeng , equipped with global-known testers, Risen tests not only including all types of modules with result free from PID(potential induced degradation), NO Hot Spots, but also undergo a series tests with standard DOUBLE of IEC61215, IEC61730! All of these extremely rigorous tests ensured the modules delivered by Risen of reliable high quality, in plain English, our partner can sit back and relax!

Combination of Human, Enterprise and Product

This is the core value of Risen. We put human factor as No.1 leading to perfection. Through running a public enterprise, Risen teams up 3200 workers together to deliver clean energy on the planet and improve the quality of life sustainably.

Value of Partner: Reliable partnership, Rising Value;

Working Attitude: Be Careful, fast, committed, promise to complete mission, No excuse.

Business Concept: Scalability, Innovation, Excellence.

Brand Concept: The power of rising value.

GROWTH PROCESS

Witnessing the rise of China PV industry

EXTENSIVE SALES NETWORK

We exert ourselves to develop specific target groups through in-depth investigation, rapid emergency response and comprehensive marketing strategy. Meanwhile, our products are exported to more than 30 countries and regions, most of which are exported to Europe, North America, South Africa, and Southeast Asia.

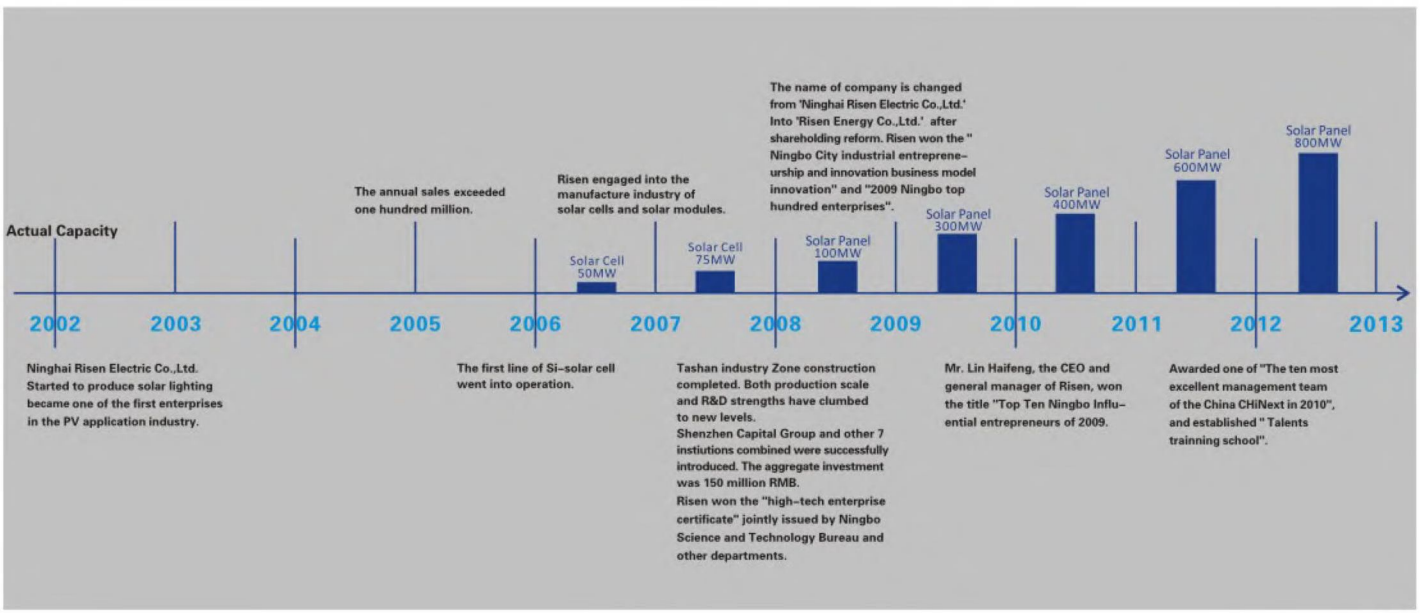

BRIEF INTRODUCTION

ROOF SYSTEM	
Location	Belgium
Installation Date	2009
System Size	95KW
Module type	SYP190S-M

ROOF SYSTEM	
Location	Italy
Installation Date	2010
System Size	4420W
Module type	SYP170S-50M

ROOF SYSTEM	
Location	Cham,Germany
Installation Date	2009
System Size	0.98MW
Module type	SYP180S-M

ROOF SYSTEM	
Location	Italy
Installation Date	2009
System Size	0.8MW
Module type	SYP180S-M

ROOF SYSTEM	
Location	Padania Italy
Installation Date	2009
System Size	300KW
Module type	SYP180S-M

ROOF SYSTEM	
Location	Italy
Installation Date	2010
System Size	117KW
Module type	SYP230S

BRIEF INTRODUCTION

PARK	
Location	Rozna,Czech
Installation Date	2009
System Size	4.3MW
Module type	SYP180S-M

PARK	
Location	Uffenheim,Germany
Installation Date	2009
System Size	990KW
Module type	SYP180S-M

PARK	
Location	Wales,UK
Installation Date	2011
System Size	5.0MW
Module type	SYP230S

PARK	
Location	Italy
Installation Date	2010
System Size	1.2MW
Module type	SYP230S

PARK	
Location	Slovakia
Installation Date	2011
System Size	990KW
Module type	SYP230S

PARK	
Location	Banska Bystrica,Slovakia
Installation Date	2010
System Size	800KW
Module type	SYP250S-M

▲ ABB Automatic Lay-up

▲ Teamtechnik Automatic welding Line

▲ SCHMID Texturing & Loading

1.Centrotherm PECVD

2.DEK Screen Printer

3.Delta Cell Sorting with Berger Testing

State-of- the-art manufacturing shows the core concept of Risen Energy: Reliable Partnership & Rising Value.

By partnering with industry-leading equipment and technology suppliers from Germany, UK, USA and PR. of China, Risen combines facility with patent technology perfectly. This combination not just shorten lead time and lower manufacturing cost, but also develop high performing modules with robust reliability.

GECO®

risen solar technology

POLY CRYSTALLINE MODULE
72x6"/250-295W

Qualified，IEC61215
Qualified，IEC61730

Electrical Characteristics

Model	Pm(Wp)	Tolerance	Vm(V)	Im(A)	Voc(V)	Isc(A)	η
SYP250S	250W	0~+3%	34.60	7.23	43.80	7.84	>12.92%
SYP255S	255W	0~+3%	34.60	7.37	43.90	7.92	>12.92%
SYP260S	260W	0~+3%	34.80	7.47	44.00	8.09	>13.44%
SYP265S	265W	0~+3%	34.90	7.60	44.30	8.13	>13.66%
SYP270S	270W	0~+3%	35.00	7.71	44.50	8.20	>13.96%
SYP275S	275W	0~+3%	35.10	7.84	44.60	8.27	>14.17%
SYP280S	280W	0~+3%	35.20	7.96	44.80	8.33	>14.47%
SYP285S	285W	0~+3%	35.32	8.07	44.80	8.48	>14.68%
SYP290S	290W	0~+3%	35.41	8.19	44.80	8.63	>14.94%
SYP295S	295W	0~+3%	35.60	8.29	44.80	8.70	>15.20%

Valued at STC (AM 1.5, 1000W/m², 25℃)

Temperature Coefficients

Temperature Coefficient of VOC(β)	-0.32%/℃
Temperature Coefficient of ISC(α)	+0.034%/℃
Temperature Coefficient of Pmax	-0.40%/℃
Nominal Operating Cell Temperature (NOCT)	45±2℃

Permissible Operating Conditions

Maximum system voltage	1000VDC
Operating temperature	-40~+85℃
Snow load	Max 5400 Pa
Wind load	Max 120km/h

Mechanical Characteristics

Number of poly crystalline solar cell	72pcsx6"
Aluminum frame, dimension	1956x992x40mm
Glass thickness	4.0mm
Weight	23kg
Junction box	IP65
Module	IP65
Tolerance of Rating	0~+3%
Number of bypass diodes	3

Warranty

10 years with 100% product warranty
12 years 90% rated power output
25 years 82% rated power output

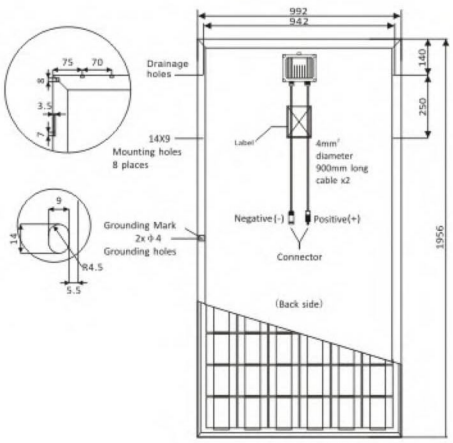

(Vorderseite)

APPROVED PRODUCT

47VC

250-295 Watt

POLY-CRYSTALLINE SOLAR PANEL

Excellent Quality

>Automatic production and testing processes;

>More than 18 IEC tests program in State-Level PV Laboratory of Risen;

>Third party liability and quality insurance;

>ISO9001,ISO14001 and OHSAS18001 management system.

Easy for installation

>Low weight, convenient format;

>Horizontal and Vertical installation applicable;

>Compatible with all standard rooftop and ground mounting systems.

Maximum Yield

>Only Positive tolerance assorted;

>Photon test with TOP performance;

>Averagely,installed projects actual power yield is 5% higher than theoretical yield.

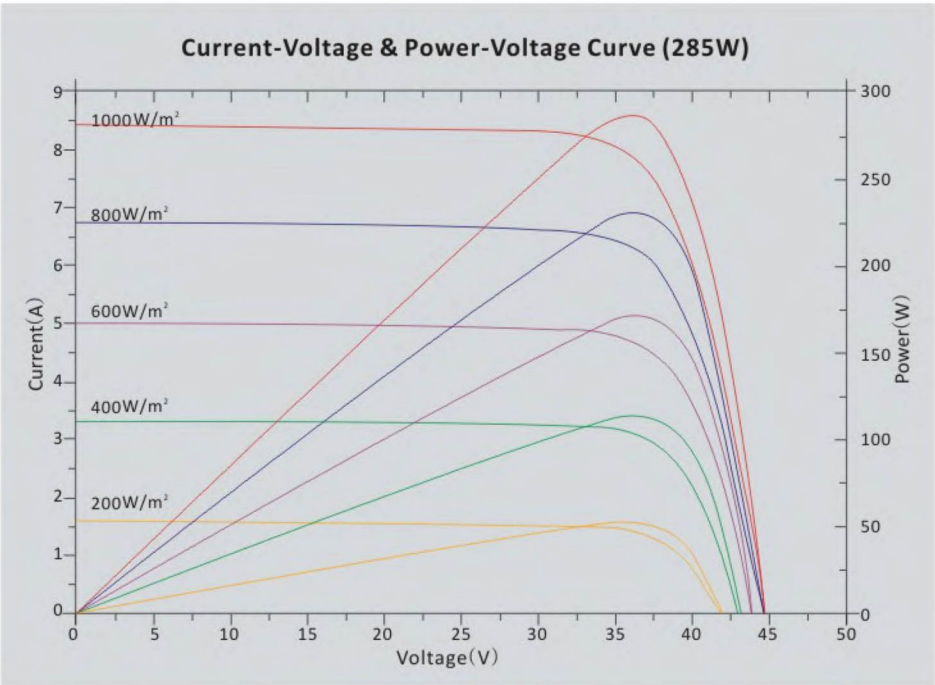

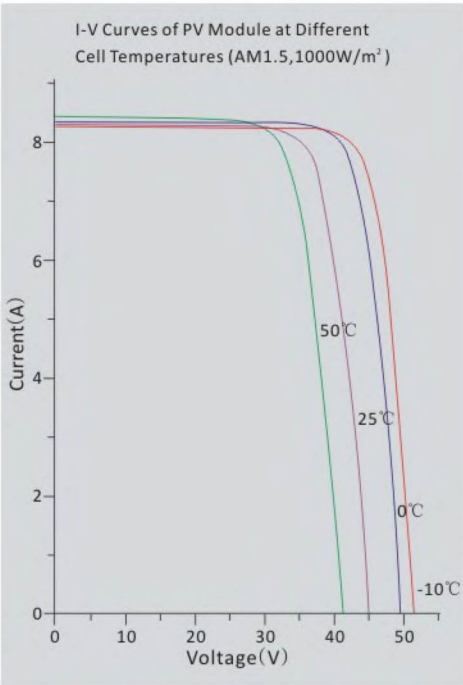

◎1. Tempered Glass
◎2. EVA (Ethylene Vinyl Acetate)
◎3.Solar Cells
◎4. EVA (Ethylene Vinyl Acetate)
◎5. Backsheet

GECO®

risen solar technology

POLY CRYSTALLINE MODULE
60x6"/200-250W

Qualified, IEC61215
Qualified, IEC61730

Electrical Characteristics

Model	Pm(Wp)	Tolerance	Vm(V)	Im(A)	Voc(V)	Isc(A)	η
SYP200S	200W	0~+3%	28.60	7.00	36.50	7.65	>12.30%
SYP210S	210W	0~+3%	29.00	7.25	36.50	7.88	>12.93%
SYP215S	215W	0~+3%	29.20	7.37	36.70	7.92	>13.23%
SYP220S	220W	0~+3%	29.50	7.46	37.00	8.10	>13.53%
SYP225S	225W	0~+3%	29.60	7.61	37.00	8.14	>13.85%
SYP230S	230W	0~+3%	29.80	7.73	37.00	8.22	>14.16%
SYP235S	235W	0~+3%	30.00	7.84	37.10	8.28	>14.46%
SYP240S	240W	0~+3%	30.20	7.96	37.20	8.33	>14.78%
SYP245S	245W	0~+3%	30.30	8.09	37.30	8.34	>15.07%
SYP250P	250W	0~+3%	30.30	8.26	37.30	8.90	>15.37%

Valued at STC (AM 1.5, 1000W/m², 25℃)

Temperature Coefficients

Temperature Coefficient of VOC(β)	-0.33%/℃
Temperature Coefficient of ISC(α)	+0.033%/℃
Temperature Coefficient of Pmax	-0.39%/℃
Nominal Operating Cell Temperature (NOCT)	45±2℃

Permissible Operating Conditions

Maximum system voltage	1000VDC
Operating temperature	-40~+85℃
Snow load	Max 5400 Pa
Wind load	Max 120km/h

Mechanical Characteristics

Number of poly crystalline solar cell	60pcsx6"
Aluminum frame, dimension	1640x992x40mm
Glass thickness	3.2mm
Weight	19.5kg
Junction box	IP65
Module	IP65
Tolerance of Rating	0~+3%
Number of bypass diodes	3

Warranty

10 years with 100% product warranty
12 years 90% rated power output
25 years 82% rated power output

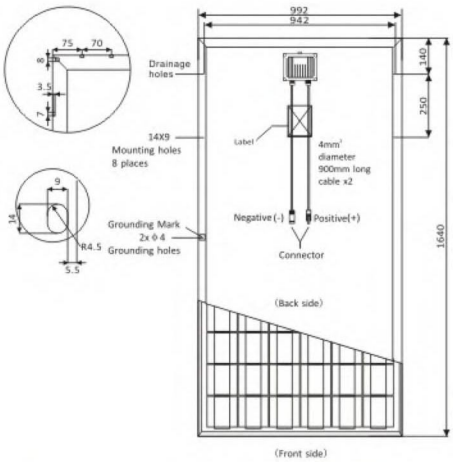

APPROVED PRODUCT MCS

c UL us 47VC

PV CYCLE

TÜV Type Tested

GECO®

200-250 Watt

POLY-CRYSTALLINE SOLAR PANEL

Excellent Quality

>Automatic production and testing processes;

>More than 18 IEC tests program in State-Level PV Laboratory of Risen;

>Third party liability and quality insurance;

>ISO9001,ISO14001 and OHSAS18001 management system.

Easy for installation

>Low weight, convenient format;

>Horizontal and Vertical installation applicable;

>Compatible with all standard rooftop and ground mounting systems.

Maximum Yield

>Only Positive tolerance assorted;

>Photon test with TOP performance;

>Averagely,installed projects actual power yield is 5% higher than theoretical yield.

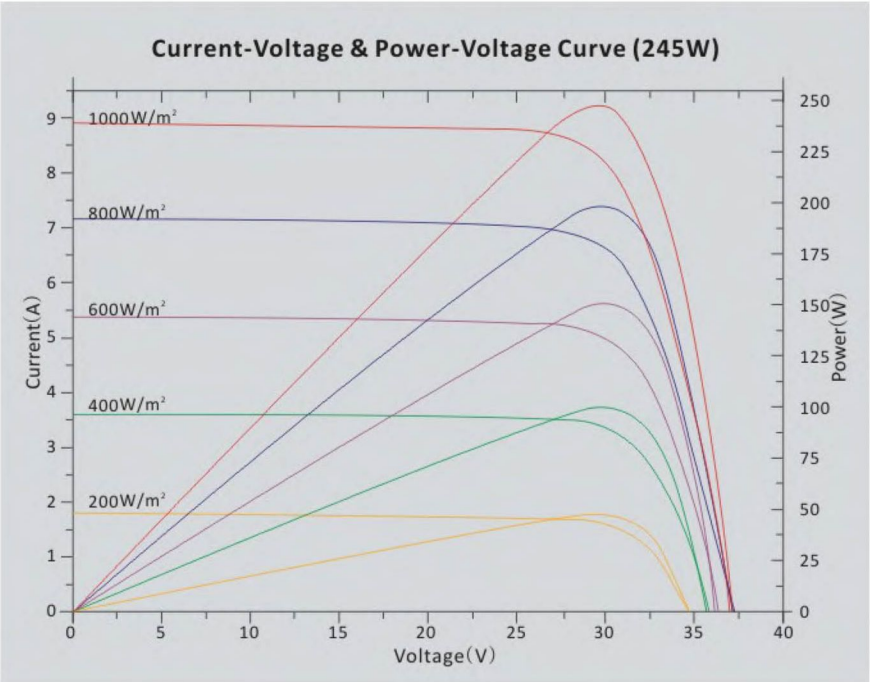

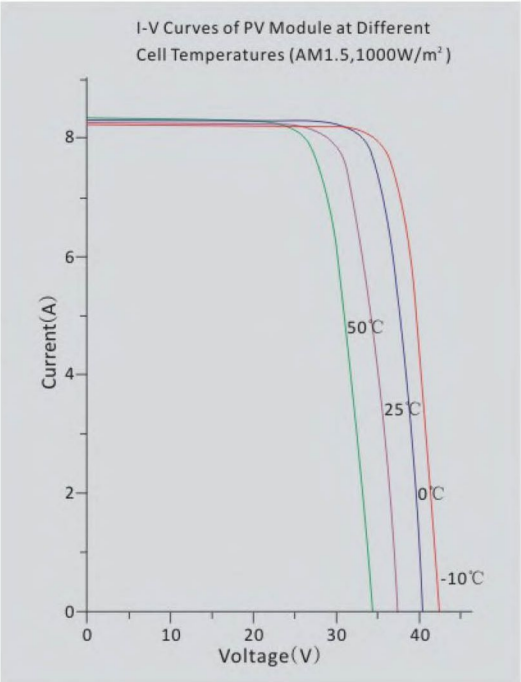

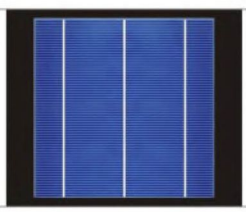

◎1. Tempered Glass
◎2. EVA (Ethylene Vinyl Acetate)
◎3.Solar Cells
◎4. EVA (Ethylene Vinyl Acetate)
◎5. Backsheet

GECO®

risen solar technology

POLY CRYSTALLINE MODULE
54x6"/200-225W

Qualified，IEC61215
Qualified，IEC61730

Electrical Characteristics

Model	Pm(Wp)	Tolerance	Vm(V)	Im(A)	Voc(V)	Isc(A)	η
SYP200P	200W	0~+3%	25.90	7.73	32.70	8.10	>13.53%
SYP205P	205W	0~+3%	26.46	7.75	32.90	8.20	>13.86%
SYP210P	210W	0~+3%	27.00	7.78	32.90	8.25	>14.20%
SYP215P	215W	0~+3%	27.10	7.94	33.00	8.43	>14.54%
SYP220P	220W	0~+3%	27.10	8.12	33.00	8.50	>14.88%
SYP225P	225W	0~+3%	27.30	8.23	33.20	8.56	>15.22%

Valued at STC (AM 1.5, 1000W/m², 25℃)

Temperature Coefficients

Temperature Coefficient of VOC(β)	-0.31%/℃
Temperature Coefficient of ISC(α)	+0.034%/℃
Temperature Coefficient of Pmax	-0.39%/℃
Nominal Operating Cell Temperature (NOCT)	45±2℃

Permissible Operating Conditions

Maximum system voltage	1000VDC
Operating temperature	-40~+85℃
Snow load	Max 5400 Pa
Wind load	Max 120km/h

Mechanical Characteristics

Number of poly crystalline solar cell	54pcsx6"
Aluminum frame, dimension	1490x992x40mm
Glass thickness	3.2mm
Weight	18kg
Junction box	IP65
Module	IP65
Tolerance of Rating	0~+3%
Number of bypass diodes	3

Warranty

10 years with 100% product warranty
12 years 90% rated power output
25 years 82% rated power output

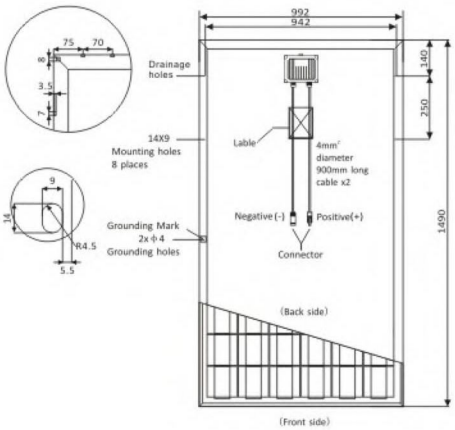

APPROVED PRODUCT

47VC

PV CYCLE

GECO®

200-225 Watt

POLY-CRYSTALLINE SOLAR PANEL

Excellent Quality

>Automatic production and testing processes;

>More than 18 IEC tests program in State-Level PV Laboratory of Risen;

>Third party liability and quality insurance;

>ISO9001,ISO14001 and OHSAS18001 management system.

Easy for installation

>Low weight, convenient format;

>Horizontal and Vertical installation applicable;

>Compatible with all standard rooftop and ground mounting systems.

Maximum Yield

>Only Positive tolerance assorted;

>Photon test with TOP performance;

>Averagely,installed projects actual power yield is 5% higher than theoretical yield.

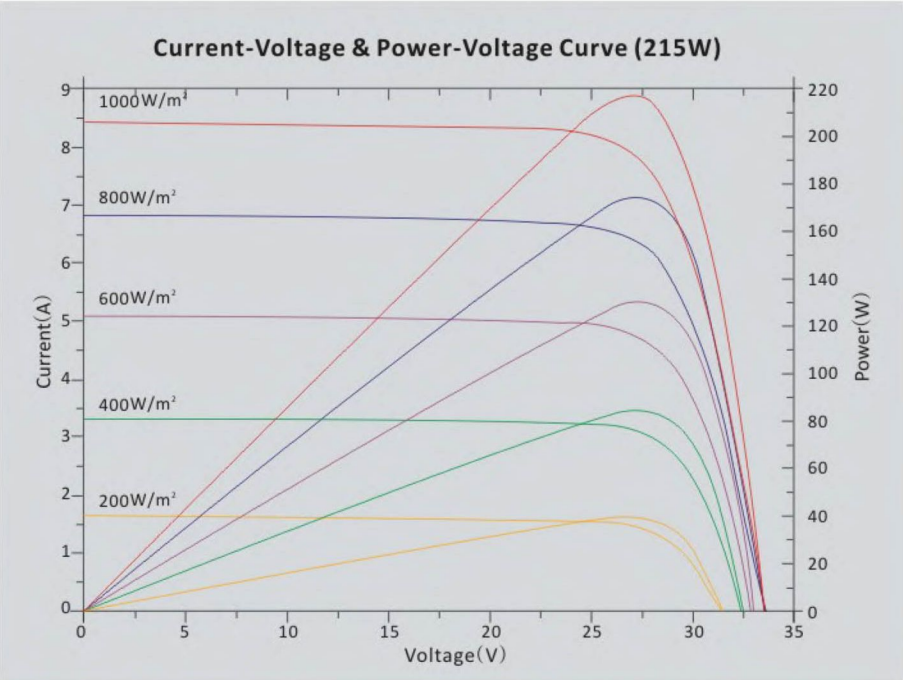

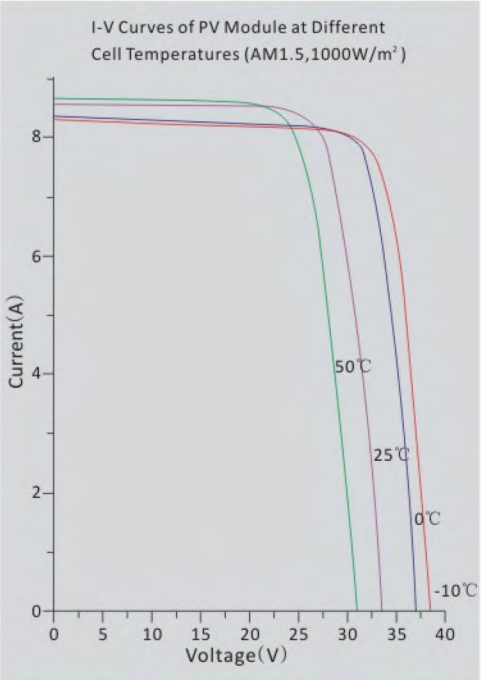

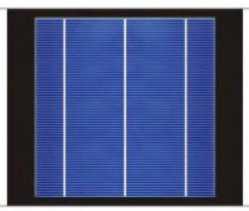

◎1. Tempered Glass
◎2. EVA (Ethylene Vinyl Acetate)
◎3.Solar Cells
◎4. EVA (Ethylene Vinyl Acetate)
◎5. Backsheet

GECO®

risen solar technology

MONO CRYSTALLINE MODULE
72x6"/270-310W

Qualified, IEC61215
Qualified, IEC61730

Electrical Characteristics

Model	Pm(Wp)	Tolerance	Vm(V)	Im(A)	Voc(V)	Isc(A)	η
SYP270M	270W	0~+3%	35.00	7.71	44.50	8.20	>13.93%
SYP280M	280W	0~+3%	35.20	7.95	44.80	8.33	>14.45%
SYP290M	290W	0~+3%	35.40	8.19	44.80	8.59	>14.97%
SYP295M	295W	0~+3%	35.60	8.28	44.80	8.64	>15.24%
SYP300M	300W	0~+3%	35.80	8.37	44.80	8.73	>15.46%
SYP305M	305W	0~+3%	35.90	8.50	44.80	8.84	>15.71%
SYP310M	310W	0~+3%	36.00	8.61	44.90	8.91	>15.99%

Valued at STC (AM 1.5, 1000W/m², 25℃)

Temperature Coefficients

Temperature Coefficient of VOC(β)	-0.31%/℃
Temperature Coefficient of ISC(α)	+0.03%/℃
Temperature Coefficient of Pmax	-0.40%/℃
Nominal Operating Cell Temperature (NOCT)	45±2℃

Permissible Operating Conditions

Maximum system voltage	1000VDC
Operating temperature	-40~+85℃
Snow load	Max 5400 Pa
Wind load	Max 120km/h

Mechanical Characteristics

Number of mono crystalline solar cell	72pcsx6"
Aluminum frame, dimension	1956x992x40mm
Glass thickness	4.0mm
Weight	22.5kg
Junction box	IP65
Module	IP65
Tolerance of Rating	0~+3%
Number of bypass diodes	3

Warranty

10 years with 100% product warranty
12 years 90% rated power output
25 years 82% rated power output

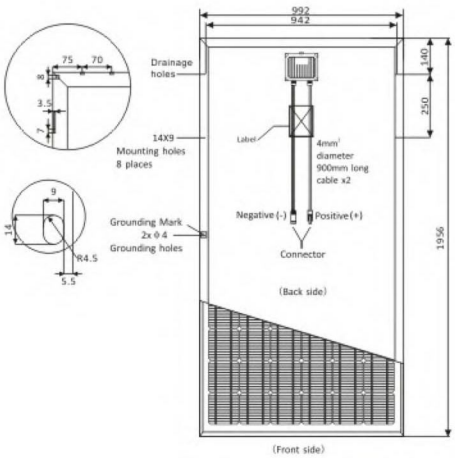

APPROVED PRODUCT
47VC
PV CYCLE

GECO®

270-310 Watt

MONO-CRYSTALLINE SOLAR PANEL

Excellent Quality

>Automatic production and testing processes;

>More than 18 IEC tests program in State-Level PV Laboratory of Risen;

>Third party liability and quality insurance;

>ISO9001,ISO14001 and OHSAS18001 management system.

Easy for installation

>Low weight, convenient format;

>Horizontal and Vertical installation applicable;

>Compatible with all standard rooftop and ground mounting systems.

Maximum Yield

>Only Positive tolerance assorted;

>Photon test with TOP performance;

>Averagely,installed projects actual power yield is 5% higher than theoretical yield.

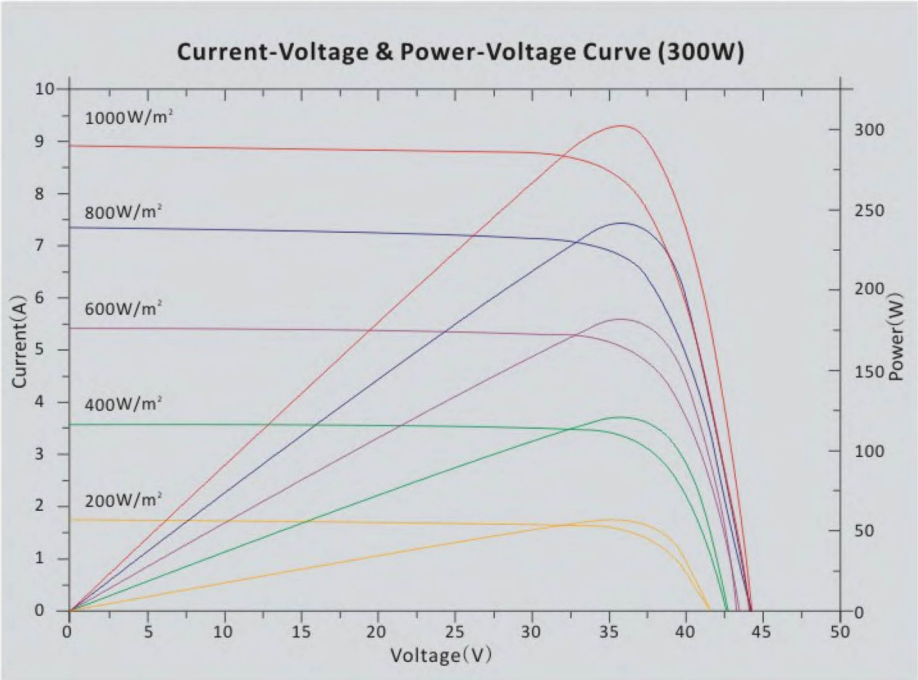

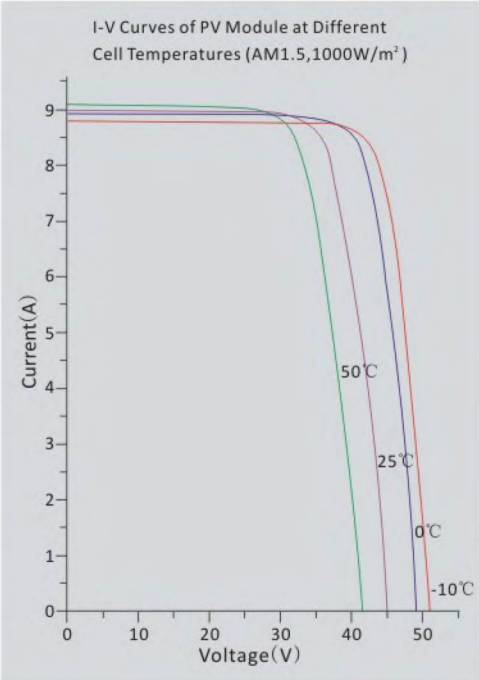

◎1. Tempered Glass
◎2. EVA (Ethylene Vinyl Acetate)
◎3.Solar Cells
◎4. EVA (Ethylene Vinyl Acetate)
◎5. Backsheet

GECO®

risen solar technology

MONO CRYSTALLINE MODULE
60x6"/210-260W

Qualified，IEC61215
Qualified，IEC61730

Electrical Characteristics

Model	Pm(Wp)	Tolerance	Vm(V)	Im(A)	Voc(V)	Isc(A)	η
SYP210M	210W	0~+3%	29.00	7.24	36.50	7.88	>12.91%
SYP220M	220W	0~+3%	29.50	7.45	37.00	8.10	>13.52%
SYP230M	230W	0~+3%	29.80	7.73	37.00	8.22	>14.14%
SYP240M	240W	0~+3%	30.20	7.95	37.20	8.33	>14.75%
SYP245M	245W	0~+3%	30.30	8.09	37.40	8.48	>15.03%
SYP250M	250W	0~+3%	30.40	8.25	37.50	8.59	>15.36%
SYP255M	255W	0~+3%	30.50	8.39	37.50	8.64	>15.64%
SYP260M	260W	0~+3%	30.50	8.53	37.50	8.77	>15.96%

Valued at STC (AM 1.5, 1000W/m², 25℃)

Temperature Coefficients

Temperature Coefficient of VOC(β)	-0.33%/℃
Temperature Coefficient of ISC(α)	+0.03%/℃
Temperature Coefficient of Pmax	-0.41%/℃
Nominal Operating Cell Temperature (NOCT)	45±2℃

Permissible Operating Conditions

Maximum system voltage	1000VDC
Operating temperature	-40~+85℃
Snow load	Max 5400 Pa
Wind load	Max 120km/h

Mechanical Characteristics

Number of mono crystalline solar cell	60pcsx6"
Aluminum frame, dimension	1640x992x40mm
Glass thickness	3.2mm
Weight	19.5kg
Junction box	IP65
Module	IP65
Tolerance of Rating	0~+3%
Number of bypass diodes	3

Warranty

10 years with 100% product warranty
12 years 90% rated power output
25 years 82% rated power output

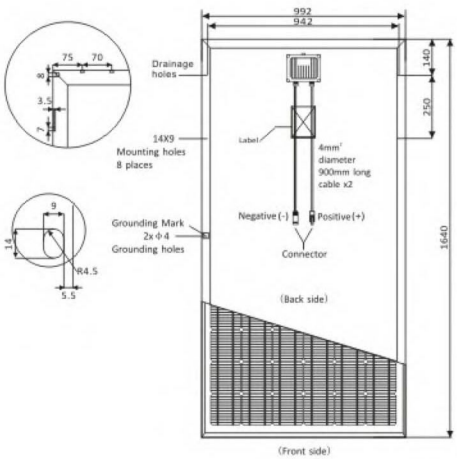

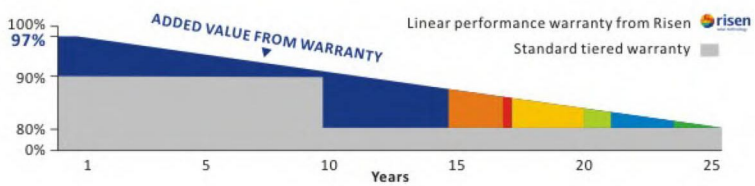

APPROVED PRODUCT MCS

c UL us 47VC

PV CYCLE

210-260 Watt

MONO-CRYSTALLINE SOLAR PANEL

Excellent Quality

>Automatic production and testing processes;

>More than 18 IEC tests program in State-Level PV Laboratory of Risen;

>Third party liability and quality insurance;

>ISO9001,ISO14001 and OHSAS18001 management system.

Easy for installation

>Low weight, convenient format;

>Horizontal and Vertical installation applicable;

>Compatible with all standard rooftop and ground mounting systems.

Maximum Yield

>Only Positive tolerance assorted;

>Photon test with TOP performance;

>Averagely,installed projects actual power yield is 5% higher than theoretical yield.

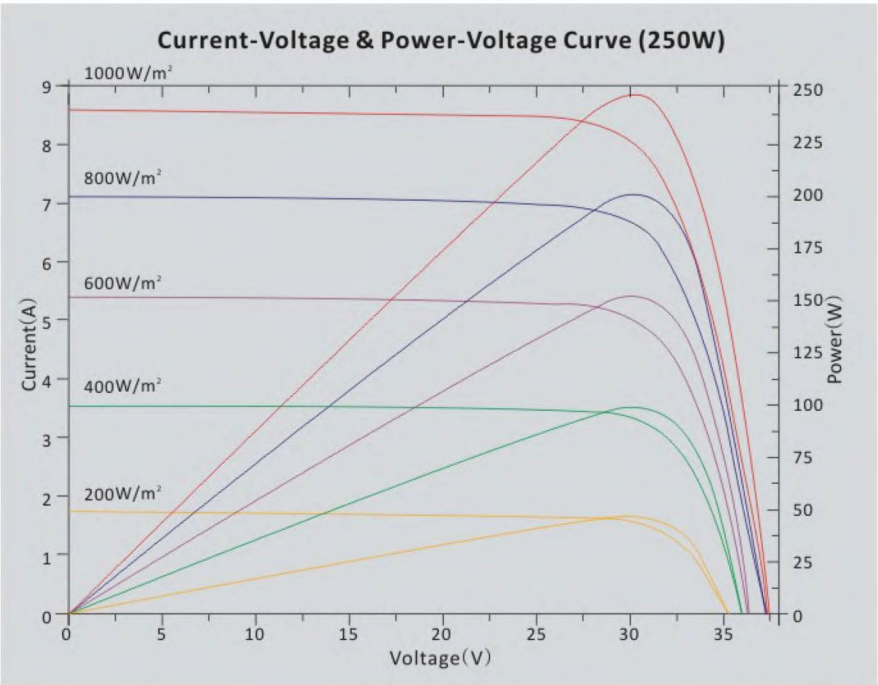

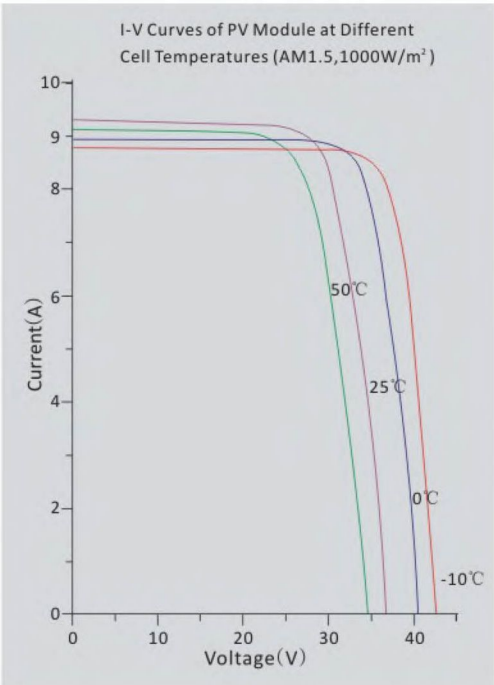

◎1. Tempered Glass

◎2. EVA (Ethylene Vinyl Acetate)

◎3.Solar Cells

◎4. EVA (Ethylene Vinyl Acetate)

◎5. Backsheet

GECO®

risen solar technology

MONO CRYSTALLINE MODULE
54x6"/205-220W

Qualified，IEC61215
Qualified，IEC61730

Electrical Characteristics

Model	Pm(Wp)	Tolerance	Vm(V)	Im(A)	Voc(V)	Isc(A)	η
SYP205M	205W	0~+3%	27.00	7.59	33.24	7.98	>13.86%
SYP210M	210W	0~+3%	27.20	7.72	33.29	8.06	>14.20%
SYP215M	215W	0~+3%	27.30	7.88	33.25	8.28	>14.54%
SYP220M	220W	0~+3%	27.50	8.00	33.41	8.51	>14.88%

Valued at STC (AM 1.5, 1000W/m², 25℃)

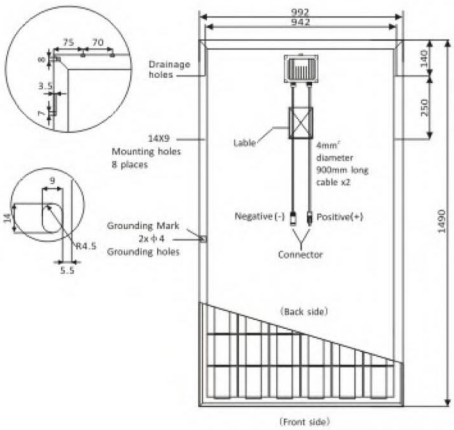

Temperature Coefficients

Temperature Coefficient of VOC(β)	-0.33%/℃
Temperature Coefficient of ISC(α)	+0.033%/℃
Temperature Coefficient of Pmax	-0.40%/℃
Nominal Operating Cell Temperature (NOCT)	45±2℃

Permissible Operating Conditions

Maximum system voltage	1000VDC
Operating temperature	-40~+85℃
Snow load	Max 5400 Pa
Wind load	Max 120km/h

Mechanical Characteristics

Number of mono crystalline solar cell	54pcsx6"
Aluminum frame, dimension	1490x992x40mm
Glass thickness	3.2mm
Weight	18kg
Junction box	IP65
Module	IP65
Tolerance of Rating	0~+3%
Number of bypass diodes	3

Warranty

10 years with 100% product warranty
12 years 90% rated power output
25 years 82% rated power output

APPROVED PRODUCT

47VC

PV CYCLE

GECO®

205-220 Watt

MONO-CRYSTALLINE SOLAR PANEL

Excellent Quality

>Automatic production and testing processes;

>More than 18 IEC tests program in State-Level PV Laboratory of Risen;

>Third party liability and quality insurance;

>ISO9001,ISO14001 and OHSAS18001 management system.

Easy for installation

>Low weight, convenient format;

>Horizontal and Vertical installation applicable;

>Compatible with all standard rooftop and ground mounting systems.

Maximum Yield

>Only Positive tolerance assorted;

>Photon test with TOP performance;

>Averagely,installed projects actual power yield is 5% higher than theoretical yield.

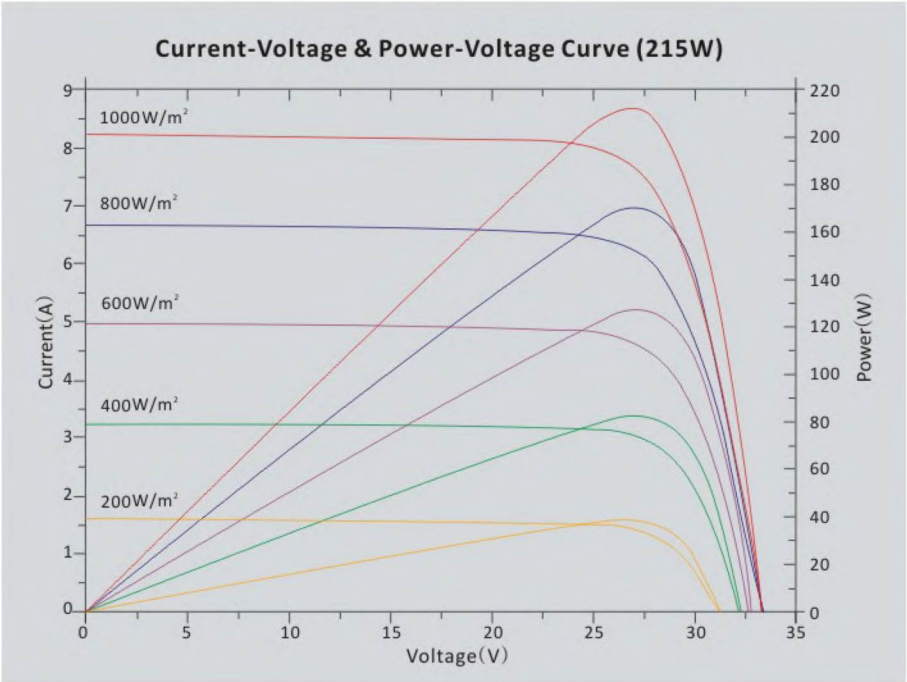

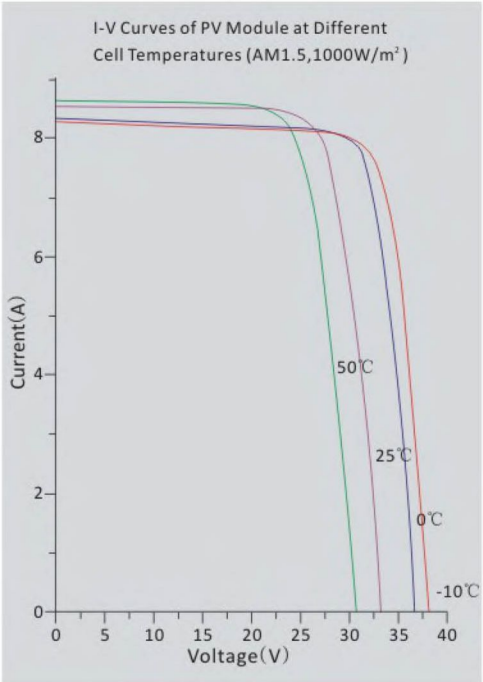

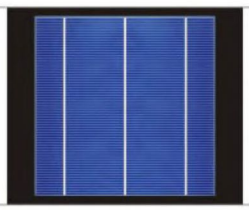

◎1. Tempered Glass
◎2. EVA (Ethylene Vinyl Acetate)
◎3.Solar Cells
◎4. EVA (Ethylene Vinyl Acetate)
◎5. Backsheet

GECO®

risen solar technology

MONO CRYSTALLINE MODULE/(STRONG)
72x5"/185-205W

www.tuv.com TÜVRheinland ID:0000025918

Qualified, IEC61215
Qualified, IEC61730

Electrical Characteristics

Model	Pm(Wp)	Tolerance	Vm(V)	Im(A)	Voc(V)	Isc(A)	η
SYP185S-M	185W	0~+3%	36.21	5.11	45.00	5.40	>14.49%
SYP190S-M	190W	0~+3%	36.60	5.20	45.10	5.60	>14.88%
SYP195S-M	195W	0~+3%	36.80	5.30	45.30	5.60	>15.27%
SYP200S-M	200W	0~+3%	37.00	5.40	45.50	5.86	>15.66%
SYP205S-M	205W	0~+3%	37.20	5.52	45.60	5.93	>16.05%

Valued at STC (AM 1.5, 1000W/m², 25℃)

Temperature Coefficients

Temperature Coefficient of VOC(β)	-0.32%/℃
Temperature Coefficient of ISC(α)	+0.02%/℃
Temperature Coefficient of Pmax	-0.40%/℃
Nominal Operating Cell Temperature (NOCT)	45±2℃

Permissible Operating Conditions

Maximum system voltage	1000VDC
Operating temperature	-40~+85℃
Snow load	Max 5400 Pa
Wind load	Max 120km/h

Mechanical Characteristics

Number of mono crystalline solar cell	72pcsx5"
Aluminum frame, dimension	1580x808x35/50mm
Glass thickness	4.0mm
Weight	15/16.5kg
Junction box	IP65
Module	IP65
Tolerance of Rating	0~+3%
Number of bypass diodes	3

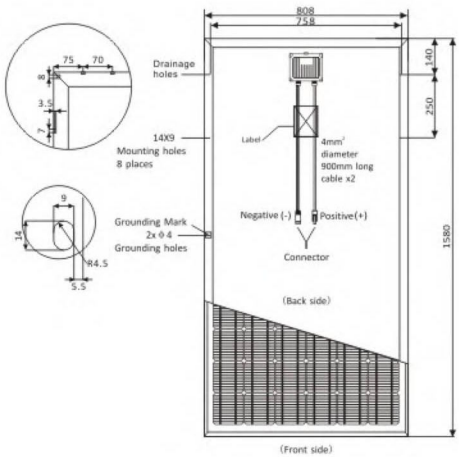

Warranty

10 years with 100% product warranty
12 years 90% rated power output
25 years 82% rated power output

APPROVED PRODUCT MCS

c UL us 47VC

PV CYCLE

TÜV NORD Type Tested

185-205 Watt

MONO-CRYSTALLINE SOLAR PANEL

Excellent Quality

>Automatic production and testing processes;

>More than 18 IEC tests program in State-Level PV Laboratory of Risen;

>Third party liability and quality insurance;

>ISO9001,ISO14001 and OHSAS18001 management system.

Easy for installation

>Low weight, convenient format;

>Horizontal and Vertical installation applicable;

>Compatible with all standard rooftop and ground mounting systems.

Maximum Yield

>Only Positive tolerance assorted;

>Photon test with TOP performance;

>Averagely,installed projects actual power yield is 5% higher than theoretical yield.

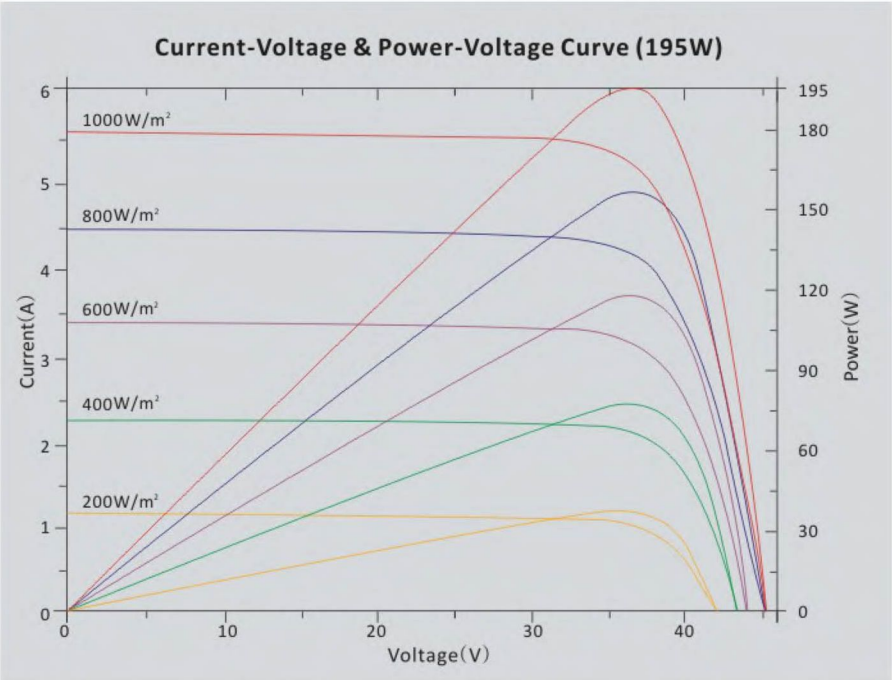

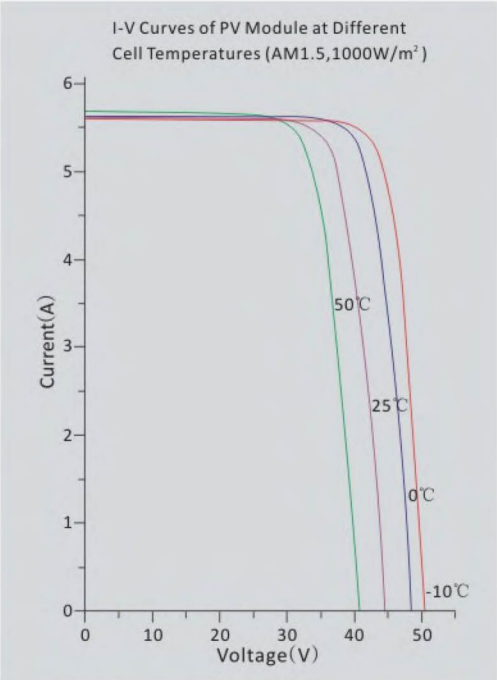

◎1. Tempered Glass

◎2. EVA (Ethylene Vinyl Acetate)

◎3.Solar Cells

◎4. EVA (Ethylene Vinyl Acetate)

◎5. Backsheet

GECO®

risen solar technology

90-150 Watt

POLY CRYSTALLINE MODULE 36x6"

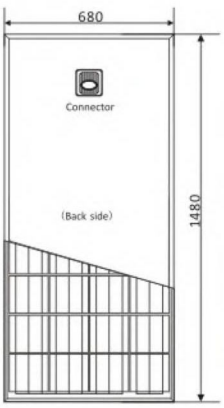

Electrical Characteristics

Model	Pm(Wp)	Tolerance	Vm(V)	Im(A)	Voc(V)	Isc(A)
SYP90S	90W	+-3%	16.8	5.36	21.2	7.26
SYP95S	95W	+-3%	16.8	5.66	21.2	7.33
SYP100S	100W	+-3%	16.9	5.92	21.3	7.41
SYP105S	105W	+-3%	17.0	6.18	21.4	7.48
SYP110S	110W	+-3%	17.0	6.48	21.4	7.52
SYP115S	115W	+-3%	17.0	6.78	21.4	7.58
SYP120S	120W	+-3%	17.2	6.98	21.6	7.68
SYP125S	125W	+-3%	17.4	7.21	21.7	7.79
SYP130S	130W	+-3%	17.6	7.41	21.8	8.03
SYP135S	135W	+-3%	17.8	7.58	22.0	8.17
SYP140S	140W	+-3%	18.1	7.72	22.1	8.32
SYP145S	145W	+-3%	18.2	7.97	22.2	8.55
SYP150S	150W	+-3%	18.3	8.20	22.3	8.81

Valued at STC (AM 1.5, 1000W/m², 25℃)

Temperature Coefficients

Temperature Coefficient of VOC(β)	-0.39%/℃
Temperature Coefficient of ISC(α)	+0.033%/℃
Temperature Coefficient of Pmax	-0.44%/℃
Nominal Operating Cell Temperature (NOCT)	45±2℃

Permissible Operating Conditions

Maximum system voltage	1000VDC
Operating temperature	-40~+85℃
Snow load	Max 5400 Pa
Wind load	Max 120km/h

Mechanical Characteristics

Number of ploy crystalline solar cell	36pcsx6"
Aluminum frame, dimension	1480x680x30mm
Weight	12kg
Junction box	IP65
Module	IP65
Tolerance of Rating	-3%~+3%

70-85 Watt

POLY CRYSTALLINE MODULE 36x(156mmx104mm)

Electrical Characteristics

Model	Pm(Wp)	Tolerance	Vm(V)	Im(A)	Voc(V)	Isc(A)
SYP70S	70W	+-3%	16.9	4.16	21.3	4.91
SYP75S	75W	+-3%	17.0	4.43	21.4	4.97
SYP80S	80W	+-3%	17.4	4.61	21.6	5.16
SYP85S	85W	+-3%	17.6	4.84	21.7	5.24

Valued at STC (AM 1.5, 1000W/m², 25℃)

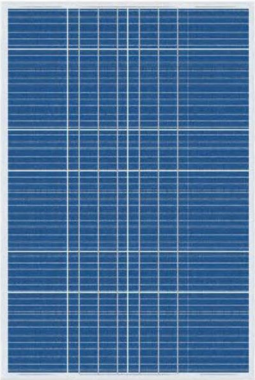

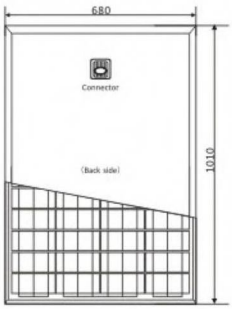

Specifications

-Number of poly crystalline solar cell 36pcsx(156mmX104mm)
-Aluminum frame, dimension 1010x680x25mm
-Maximum system voltage 1000VDC
-Weight 7.8kg
-Temperature coefficient of VOC(β) =-0.39%/℃
-Temperature coefficient of ISC(α)=+0.033%/℃
-Temperature coefficient of Pmax=-0.44%/℃
-Bypass diodes to reduce loss in partial shadow
-IP65
-CE Standard
-Performance test data for each module

50-65 Watt

POLY CRYSTALLINE MODULE 36x(156mmx78mm)

Electrical Characteristics

Model	Pm(Wp)	Tolerance	Vm(V)	Im(A)	Voc(V)	Isc(A)
SYP50S	50W	+-3%	16.9	2.99	20.88	3.65
SYP55S	55W	+-3%	17.0	3.24	21.2	3.71
SYP60S	60W	+-3%	17.3	3.47	21.6	3.85
SYP65S	65W	+-3%	17.6	3.70	21.8	4.02

Valued at STC (AM 1.5, 1000W/m², 25℃)

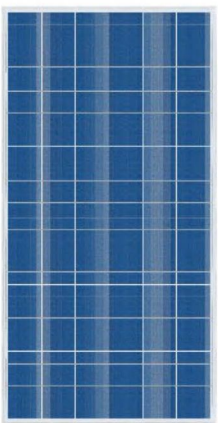

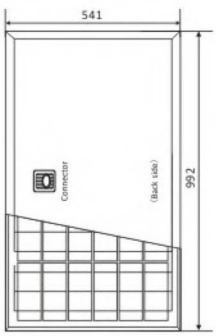

Specifications

-Number of poly crystalline solar cell 36pcsx(156mmX78mm)
-Aluminum frame, dimension 992x541x25mm
-Maximum system voltage 1000VDC
-Weight 6.2kg
-Temperature coefficient of VOC(β) =-0.39%/℃
-Temperature coefficient of ISC(α)=+0.033%/℃
-Temperature coefficient of Pmax=-0.44%/℃
-Bypass diodes to reduce loss in partial shadow
-IP65
-CE Standard
-Performance test data for each module

30-45 Watt

POLY CRYSTALLINE MODULE 36x(156mmx52mm)

Electrical Characteristics

Model	Pm(Wp)	Tolerance	Vm(V)	Im(A)	Voc(V)	Isc(A)
SYP30S	30W	+-3%	16.8	1.86	21.3	2.34
SYP35S	35W	+-3%	17.0	2.07	21.4	2.49
SYP40S	40W	+-3%	17.4	2.31	21.6	2.57
SYP45S	45W	+-3%	17.8	2.53	21.9	2.73

Valued at STC (AM 1.5, 1000W/m², 25℃)

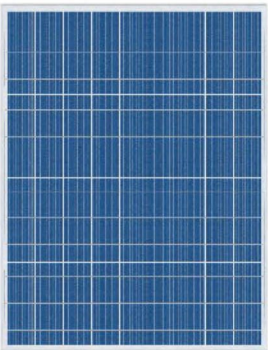

Specifications

-Number of poly crystalline solar cell 36pcsx(156mmX52mm)
-Aluminum frame, dimension 660x541x25mm
-Maximum system voltage 1000VDC
-Weight 3.5kg
-Temperature coefficient of VOC(β) =-0.39%/℃
-Temperature coefficient of ISC(α)=+0.033%/℃
-Temperature coefficient of Pmax=-0.44%/℃
-Bypass diodes to reduce loss in partial shadow
-IP65
-CE Standard
-Performance test data for each module

20-25 Watt

POLY CRYSTALLINE MODULE 36x(156mmx39mm)

Electrical Characteristics

Model	Pm(Wp)	Tolerance	Vm(V)	Im(A)	Voc(V)	Isc(A)
SYP20S	20W	+-3%	16.8	1.21	21.5	1.37
SYP25S	25W	+-3%	17.0	1.49	21.5	1.81

Valued at STC (AM 1.5, 1000W/m², 25℃)

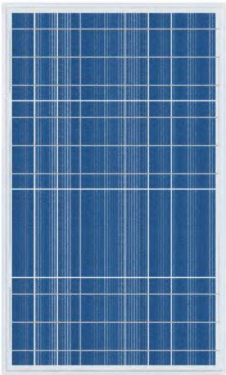

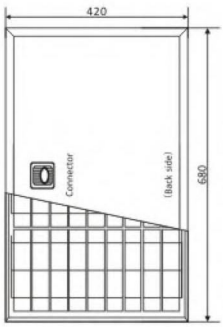

Specifications

-Number of poly crystalline solar cell 36pcsx(156mmX39mm)
-Aluminum frame, dimension 680x420x25mm
-Maximum system voltage 1000VDC
-Weight 2.2kg
-Temperature coefficient of VOC(β) =-0.39%/℃
-Temperature coefficient of ISC(α)=+0.033%/℃
-Temperature coefficient of Pmax=-0.44%/℃
-Bypass diodes to reduce loss in partial shadow
-IP65
-CE Standard
-Performance test data for each module

10-15 Watt

POLY CRYSTALLINE MODULE 36x(52mmx52mm)

Electrical Characteristics

Model	Pm(Wp)	Tolerance	Vm(V)	Im(A)	Voc(V)	Isc(A)
SYP10S	10W	+-3%	16. 8	0.65	21.3	0.80
SYP12S	12W	+-3%	17.0	0.71	21.7	0.83
SYP15S	15W	+-3%	17.8	0.85	21.9	0.91

Valued at STC (AM 1.5, 1000W/m², 25℃)

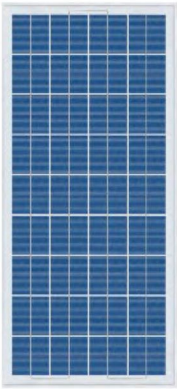

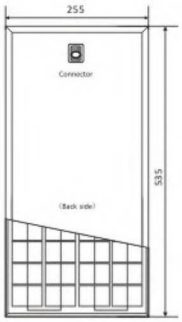

(Front side)

Specifications

-Number of poly crystalline solar cell 36pcsx(52mmX52mm)
-Aluminum frame, dimension 535x255x17mm
-Maximum system voltage 1000VDC
-Weight 1.2kg
-Temperature coefficient of VOC(β) =-0.39%/℃
-Temperature coefficient of ISC(α)=+0.033%/℃
-Temperature coefficient of Pmax=-0.44%/℃
-Bypass diodes to reduce loss in partial shadow
-IP65
-CE Standard
-Performance test data for each module

5-8 Watt

POLY CRYSTALLINE MODULE 36x(52mmx26mm)

Electrical Characteristics

Model	Pm(Wp)	Tolerance	Vm(V)	Im(A)	Voc(V)	Isc(A)
SYP5S	5W	+-3%	16.8	0.31	21.5	0.42
SYP6S	6W	+-3%	16.8	0.36	21.5	0.44
SYP7S	7W	+-3%	17.4	0.42	21.7	0.46
SYP8S	8W	+-3%	18.2	0.48	21.9	0.48

Valued at STC (AM 1.5, 1000W/m², 25℃)

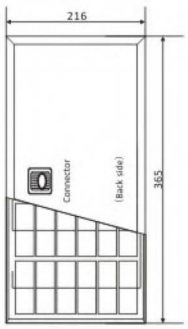

(Front side)

Specifications

-Number of poly crystalline solar cell 36pcsx(52mmX26mm)
-Aluminum frame, dimension 365x216x17mm
-Maximum system voltage 1000VDC
-Weight 0.8kg
-Temperature coefficient of VOC(β) =-0.39%/℃
-Temperature coefficient of ISC(α)=+0.033%/℃
-Temperature coefficient of Pmax=-0.44%/℃
-Bypass diodes to reduce loss in partial shadow
-IP65
-CE Standard
-Performance test data for each module

GECO®

risen solar technology

100 Watt

MONO CRYSTALLINE MODULE 44x5"

CE

Electrical Characteristics

Model	Pm(Wp)	Tolerance	Vm(V)	Im(A)	Voc(V)	Isc(A)
SYP100S-M	100W	+-3%	21.90	4.58	26.50	5.10

Valued at STC (AM 1.5, 1000W/m², 25℃)

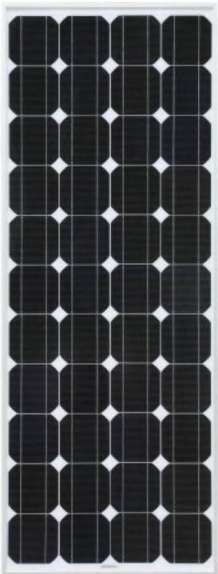

Temperature Coefficients

Temperature Coefficient of VOC(β)	-0.37%/℃
Temperature Coefficient of ISC(α)	+0.02%/℃
Temperature Coefficient of Pmax	-0.50%/℃
Nominal Operating Cell Temperature (NOCT)	48±2℃

Permissible Operating Conditions

Maximum system voltage	1000VDC
Operating temperature	-40~+85℃
Snow load	Max 5400 Pa
Wind load	Max 120km/h

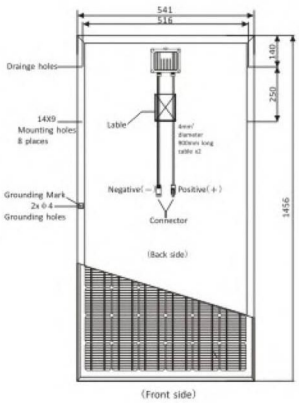

Mechanical Characteristics

Number of mono crystalline solar cell	44pcsx5"
Aluminum frame, dimension	1456x541x30mm
Weight	10.5kg
Junction box	IP65
Module	IP65
Tolerance of Rating	-3%~+3%

50 Watt

MONO CRYSTALLINE MODULE 44x(125mmx62.5mm)

Electrical Characteristics

Model	Pm(Wp)	Tolerance	Vm(V)	Im(A)	Voc(V)	Isc(A)
SYP50S-M	50W	+-3%	22.00	2.27	26.53	2.53

Valued at STC (AM 1.5, 1000W/m², 25℃)

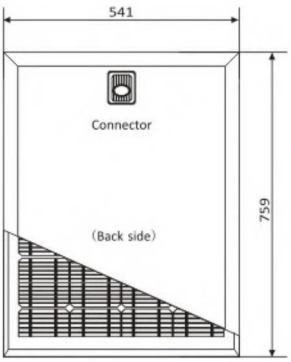

Specifications

-Number of mono crystalline solar cell 44pcsx(125mmX62.5mm)
-Aluminum frame, dimension 759x541x25mm
-Maximum system voltage 600VDC
-Weight 6kg
-Temperature coefficient of VOC(β) =-0.37%/℃
-Temperature coefficient of ISC(α)=+0.02%/℃
-Temperature coefficient of Pmax=-0.50%/℃
-IP65
-CE Standard
-Performance test data for each module
-Positive power tolerance up to +3%

35-45 Watt

MONO CRYSTALLINE MODULE 36x(125mmx62.5mm)

Electrical Characteristics

Model	Pm(Wp)	Tolerance	Vm(V)	Im(A)	Voc(V)	Isc(A)
SYP35S-M	35W	+-3%	17.20	2.04	21.60	2.12
SYP40S-M	40W	+-3%	17.60	2.27	21.80	2.48
SYP45S-M	45W	+-3%	17.60	2.57	21.90	2.66

Valued at STC (AM 1.5, 1000W/m², 25℃)

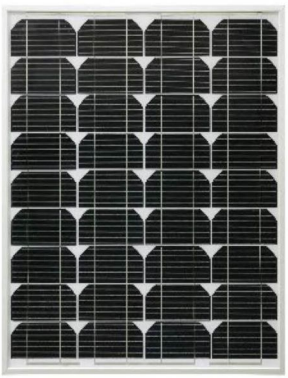

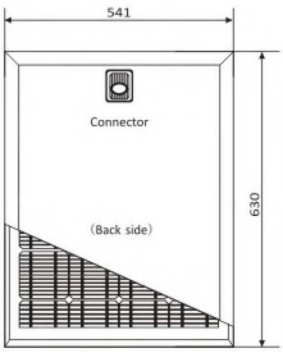

Specifications

-Number of mono crystalline solar cell 36pcsx(125mmX62.5mm)
-Aluminum frame, dimension 630x541x25mm
-Maximum system voltage 600VDC
-Weight 5.5kg
-Temperature coefficient of VOC(β) =-0.37%/℃
-Temperature coefficient of ISC(α)=+0.02%/℃
-Temperature coefficient of Pmax=-0.50%/℃
-IP65
-CE Standard
-Performance test data for each module
-Positive power tolerance up to +3%

30 Watt

MONO CRYSTALLINE MODULE 36x(125mmx62.5mm)

Electrical Characteristics

Model	Pm(Wp)	Tolerance	Vm(V)	Im(A)	Voc(V)	Isc(A)
SYP30S-M	30W	+-3%	17.80	1.68	21.60	1.88

Valued at STC (AM 1.5, 1000W/m², 25℃)

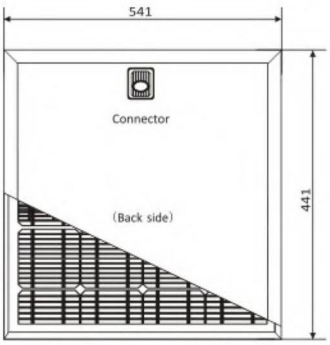

(Front side)

Specifications

-Number of mono crystalline solar cell 36pcsx(125mmX62.5mm)
-Aluminum frame, dimension 541x441x25mm
-Maximum system voltage 600VDC
-Weight 4kg
-Temperature coefficient of VOC(β) =-0.37%/℃
-Temperature coefficient of ISC(α)=+0.02%/℃
-Temperature coefficient of Pmax=-0.50%/℃
-Bypass diodes to reduce loss in partial shadow
-IP65
-CE Standard
-Performance test data for each module
-Positive power tolerance up to +3%

15-20 Watt

MONO CRYSTALLINE MODULE 36x(125mmx31.25mm)

Electrical Characteristics

Model	Pm(Wp)	Tolerance	Vm(V)	Im(A)	Voc(V)	Isc(A)
SYP15S-M	15W	+-3%	17.00	0.89	21.20	0.70
SYP20S-M	20W	+-3%	17.20	1.162	21.40	1.243

Valued at STC (AM 1.5, 1000W/m², 25℃)

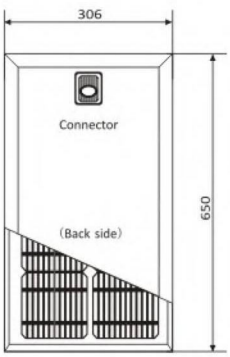

(Front side)

Specifications

-Number of mono crystalline solar cell 36pcsx(125mmX31.25mm)
-Aluminum frame, dimension 650x306x17mm
-Maximum system voltage 600VDC
-Weight 3.0kg
-Temperature coefficient of VOC(β) =-0.37%/℃
-Temperature coefficient of ISC(α)=+0.02%/℃
-Temperature coefficient of Pmax=-0.50%/℃
-Bypass diodes to reduce loss in partial shadow
-IP65
-CE Standard
-Performance test data for each module
-Positive power tolerance up to +3%

10 Watt

MONO CRYSTALLINE MODULE 36x(62.5mmx31.25mm)

Electrical Characteristics

Model	Pm(Wp)	Tolerance	Vm(V)	Im(A)	Voc(V)	Isc(A)
SYP10S-M	10W	+-3%	17.00	0.58	21.40	0.64

Valued at STC (AM 1.5, 1000W/m², 25℃)

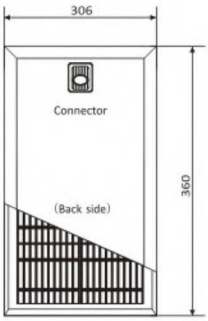

(Front side)

Specifications

-Number of mono crystalline solar cell 36pcsx(62.5mmX31.25mm)
-Aluminum frame, dimension 360x306x17mm
-Maximum system voltage 600VDC
-Weight 1.8kg
-Temperature coefficient of VOC(β) =-0.37%/℃
-Temperature coefficient of ISC(α)=+0.02%/℃
-Temperature coefficient of Pmax=-0.50%/℃
-IP65
-CE Standard
-Performance test data for each module
-Positive power tolerance up to +3%

5 Watt

MONO CRYSTALLINE MODULE 36x(62.5mmx25mm)

Electrical Characteristics

Model	Pm(Wp)	Tolerance	Vm(V)	Im(A)	Voc(V)	Isc(A)
SYP5S-17M	5W	+-3%	16.80	0.29	21.00	0.32

Valued at STC (AM 1.5, 1000W/m², 25℃)

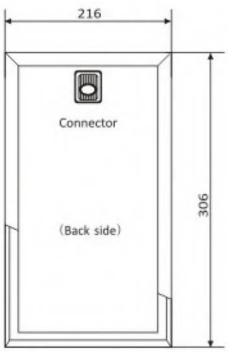

(Front side)

Specifications

-Number of mono crystalline solar cell 36pcsx(62.5mmX15.625mm)
-Aluminum frame, dimension 306x216x17mm
-Maximum system voltage 600VDC
-Weight 0.8kg
-Temperature coefficient of VOC(β) =-0.37%/℃
-Temperature coefficient of ISC(α)=+0.02%/℃
-Temperature coefficient of Pmax=-0.50%/℃
-IP65
-CE Standard
-Performance test data for each module
-Positive power tolerance up to +3%

GECO®

SOLAR POWER SYSTEMS

CONTACT :